TEHNOLOGIE DE EXECUTIE

FAZA I – LUCRARI PREGATITOARE:
Sub circulatie pe ambele fire cu viteza normala
1. Se amenajeaza drumul de acces, platforma tehnologica si organizarea de santier.
2. Se executa lucrari de pichetare, de protectie si/sau deviere instalatii semnalizare si telecomunicatii din zona lucrarilor.

FAZA II – MONTAREA PODULUI PROVIZORIU PE FIR II:
Firul I – circulatie cu 50 Km/h
Firul II – circulatie inchisa.
3. Se scoate de sub tensiune firul II si se asigura protectia electrica.
4. Se detensioneaza si se taie sinele de pe fir II, se creeaza rosturile de dilatatie.
5. Se demonteaza si se scoate calea pe zona afectata de lucrari.
6. Se executa lucrarile de protectie a instalatiilor existente in cale si vecinatate.
7. Se executa sapaturile de terasament si se pozeaza reazemele prefabricate al podului provizoriu pe perne de balast bine compactate.
8. Se bat palplansele LARSEN IV pentru sprijinirea sapaturilor.
9. Se degajeaza terasamentul si se introduce în cale podul provizoriu tip G15.
10. Se monteaza suprastructura CF pe podul provizoriu si se racordeaza la capete pe terasament.
11. Se asigura continuitatea circuitelor de cale, se asigura electroizolarea sinelor si se asigura protectia electrica a podului provizoriu.
12. Se pune sub tensiune si se deschide circulatia în trepte de viteza pana la V_{max}=30km/h conform normelor in vigoare.

FAZA III – MONTAREA PODULUI PROVIZORIU PE FIR I:
Firul I – circulatie inchisa
Firul II – circulatie cu 30 Km/h
1. Se scoate de sub tensiune firul I si se asigura protectia electrica.
2. Se detensioneaza si se taie sinele de pe fir I, se creeaza rosturile de dilatatie.
3. Se demonteaza si se scoate calea pe zona afectata de lucrari.
4. Se executa lucrarile de protectie a instalatiilor existente in cale si vecinatate.
5. Se executa sapaturile de terasament si se pozeaza reazemele prefabricate al podului provizoriu pe perne de balast bine compactate.
6. Se bat palplansele LARSEN IV pentru sprijinirea sapaturilor.
7. Se degajeaza terasamentul si se introduce în cale podul provizoriu tip G15.
8. Se monteaza suprastructura CF pe podul provizoriu si se racordeaza la capete pe terasament.
9. Se asigura continuitatea circuitelor de cale, se asigura electroizolarea sinelor si se asigura protectia electrica a podului provizoriu.
10. Se pune sub tensiune si se deschide circulatia în trepte de viteza pana la V_{max}=30km/h conform normelor in vigoare.

FAZA IV – DEMOLAREA PODETULUI EXISTENT SI EXECUTIA FUNDATIEI PODETULUI NOU LA ADAPOSTUL PODURILOR PROVIZORII:
Sub circulatie cu restrictie de viteza V_{max}=30km/h pe ambele linii, la adapostul podurilor provizorii tip G15
1. Se asigura tranzitarea apelor pe zona podetului.
2. Se degajeaza restul terasamentului din jurul podetului, se demoleaza podetul existent si racordarile cu terasamentul, inclusiv fundatiile acestora.
3. Se executa sapatura cu sprijiniri pentru realizarea fundatiilor noi.
4. Se betoneaza fundatiile podetului si a aripilor , iar in rosturile dintre fundatii se introduc doua foi de carton bitumat.

FAZA V – EXECUTIE PODET NOU AFERENT FIRULUI II:
Firul I – circulatie cu 30 Km/h
Firul II – circulatie inchisa
1. Se scoate de sub tensiune firul II si se asigura protectia electrica.
2. Se pozeaza elementele prefabricate 1–5 tip C2EN si se trateaza rosturile dintre elementele prefabricate conform detaliilor din proiect.
3. Se executa umplutura in spatele podetului, conform caietului de sarcini. Umplutura se realizeaza cu ajutorul unor sprijiniri longitudinale intre linii.
4. Se asigura continuitatea circuitelor de cale, se asigura electroizolarea sinelor si se asigura protectia electrica.
5. Se repune sub tensiune linia de contact, si se deschide circulatia în trepte de viteza corespunzator lucrarilor executate si normelor în vigoare.

FAZA VI – EXECUTIE PODET NOU AFERENT FIRULUI I:
Firul I – circulatie inchisa
Firul II – circulatie cu 30 Km/h
1. Se scoate de sub tensiune firul I si se asigura protectia electrica.
2. Se pozeaza elementele prefabricate 6÷10 tip C2EN si se trateaza rosturile dintre elementele prefabricate conform detaliilor din proiect.
3. Se executa umplutura in spatele podetului, conform caietului de sarcini.
4. Se asigura continuitatea circuitelor de cale, se asigura electroizolarea sinelor si se asigura protectia electrica.
5. Se repune sub tensiune linia de contact, si se deschide circulatia în trepte de viteza corespunzator lucrarilor executate si normelor în vigoare.
6. Se executa aripile amonte si aval.
7. Se executa drenurile laterale la cota, conform detaliilor din proiect.
8. Se asterne hidroizolatia si sapa de protectie a hidroizolatiei.
9. Se executa umplutura sub podurile provizorii, conform caietului de sarcini.

FAZA VII – DEMONTAREA PODULUI PROVIZORIU DE PE FIR I:
Firul I – circulatie inchisa
Firul II – circulatie cu 30 Km/h
1. Se scoate de sub tensiune firul I si se asigura protectia electrica.
2. Se demonteaza si se scoate calea pe zona podului provizoriu.
3. Se scoate din cale podul provizoriu tip G15 si fundatiile provizorii ale acestuia.
4. Se scot palplansele LARSEN IV.
5. Se completeaza umplutura, conform caietului de sarcini pana la cota proiectata, se executa calea conform proiect.
6. Se asigura continuitatea circuitelor de cale, se asigura electroizolarea sinelor si se asigura protectia electrica.
7. Se repune sub tensiune linia de contact, si se deschide circulatia în trepte de viteza corespunzator lucrarilor executate si normelor în vigoare.

FAZA VIII – DEMONTAREA PODULUI PROVIZORIU DE PE FIR II :
Firul I – circulatie cu 50 Km/h
Firul II – circulatie inchisa
1. Se scoate de sub tensiune firul II si se asigura protectia electrica.
2. Se demonteaza si se scoate calea pe zona podului provizoriu.
3. Se scoate din cale podul provizoriu tip G15 si fundatiile provizorii ale acestuia.
4. Se scot palplansele LARSEN IV.
5. Se completeaza umplutura, conform caietului de sarcini pana la cota proiectata, se executa calea conform proiect.
6. Se asigura continuitatea circuitelor de cale, se asigura electroizolarea sinelor si se asigura protectia electrica.
7. Se repune sub tensiune linia de contact, si se deschide circulatia în trepte de viteza corespunzator lucrarilor executate si normelor în vigoare.

FAZA IX – ALTE TIPURI LUCRARI:
Sub circulatie cu viteza normala pe ambele linii
1. Se monteaza parapetul de protectie metalic.
2. Se executa pereul in podet si intre aripi.
3. Se executa saltelele din anrocamente de la capetele podetului.
4. Se calibreaza albia in amonte si aval de podet conform proiectului.
5. Se desfiinteaza organizarea de santier si platforma de lucru.

EXECUTION TECHNOLOGY

STAGE I – PRELIMINARY WORKS:
During normal speed traffic on both lines
1. Arranging the access road, the technological platform and the site organization.
2. Executing pegging-out, protection and/or deviation works for signaling and telecommunication installations in the works' area.

STAGE II – MOUNTING THE TEMPORARY BRIDGE ON TRACK II:
Track I – traffic with 50km/h
Track II – closed traffic
1. Cutting-off the voltage on track II and ensuring the electric protection
2. Cutting-off the voltage on the rails and cutting the rails on track II, creating expansion joints.
3. Dismantling and removing the track from the area affected by works.
4. Executing protection works at the installations existing in the track and nearby.
5. Executing embankment excavations and laying-down precast bearings of the temporary bridge on well-compacted ballast pillows.
6. Driving in the LARSEN IV sheet-piles to prop-up the excavations.
7. Clearing the embankment and placing the temporary bridge type G15 into the track.
8. Mounting the railway superstructure on the temporary bridge and connecting it to the ends on the embankment.
9. Ensuring the continuity of track circuits, electric insulation of the rails and electric protection of the temporary bridge.
10. Restoring the voltage and opening the traffic with speed limits up to V/max=30km/h according to the norms in force.

STAGE III – MOUNTING THE TEMPORARY BRIDGE ON TRACK I:
Track I – closed traffic
Track II – traffic with 30km/h
1. Cutting-off the voltage on track I and ensuring the electric protection
2. Cutting-off the voltage on the rails and cutting the rails on track I, creating expansion joints.
3. Dismantling and removing the track from the area affected by works.
4. Executing protection works at the installations existing in the track and nearby.
5. Executing embankment excavations and laying-down precast bearings of the temporary bridge on well-compacted ballast pillows.
6. Driving in the LARSEN IV sheet-piles to prop-up the excavations.
7. Clearing the embankment and placing the temporary bridge type G15 into the track.
8. Mounting the railway superstructure on the temporary bridge and connecting it to the ends on the embankment.
9. Ensuring the continuity of track circuits, electric insulation of the rails and electric protection of the temporary bridge.
10. Restoring the voltage and opening the traffic with speed limits up to V/max=30km/h according to the norms in force.

STAGE IV – DEMOLISHING THE EXISTING CULVERT AND EXECUTING THE FOUNDATION OF THE NEW CULVERT UNDER THE PROTECTION OF TEMPORARY BRIDGES:
With speed traffic limit V/max=30km/h on both lines, under protection of the temporary bridges type G15
1. Ensuring the waters; flowing on the culvert area.
2. Clearing the remaining embankment from around the culvert, demolishing the existing culvert and the connections to the embankment, including their foundations.
3. Executing the propped-up excavations for executing the new foundations culvert and wings.
4. Concreting the foundations of the culvert and of the wings and introducing two asphalt board foils into the joints between foundations.

STAGE V – EXECUTING THE NEW CULVERT AFFERENT TO TRACK II:
Track I – traffic with speed limits of 30km/h
Track II – closed traffic
1. Cutting-off the voltage on track II and ensuring the electric protection.
2. Laying-down the precast elements 1–5 type C3EN and treating the joints between the precast elements, according to the design details.
3. Executing the filling behind the culvert, according to the technical specifications. The filling is executed by help of longitudinal propping-ups between the lines.
4. Executing side drains to level acc. to the design details.
5. Ensuring the continuity of the track circuits, the electrical insulation of rails and the electrical protection.
6. Restoring the voltage on contact line and reopening the railway traffic with speed levels corresponding to the executed works and to the norms in force.

STAGE VI – EXECUTING THE NEW CULVERT AFFERENT TO TRACK I:
Track I – closed traffic
Track II – traffic with speed limits of 30km/h
1. Cutting-off the voltage on track I and ensuring the electric protection.
2. Laying-down the precast elements 6÷10 type C3EN and treating the joints between the precast elements, according to the design details.
3. Executing the filling behind the culvert, according to the technical specifications.
4. Ensuring the continuity of the track circuits, the electrical insulation of rails and the electrical protection. Restoring the voltage on contact line and reopening the railway traffic with speed levels corresponding to the executed works and to the norms in force.
5. Executing the upstream wings.
6. Executing side drains to level according to the design details.
7. Placing the waterproofing and the protection blanket of the waterproofing.
8. Executing the filling under the temporary bridges according to the technical specifications.

STAGE VII – DEMOUNTING THE TEMPORARY BRIDGE FROM TRACK I:
Track I – closed traffic
Track II – traffic with speed limits of 30km/h
1. Cutting-off the voltage on track I and ensuring the electric protection.
2. Dismantling and removing the track on the area of the temporary bridge.
3. Removing the temporary bridge type G15 and its temporary foundations from the track.
4. Removing the LARSEN IV sheet-piles.
5. Supplementing the filling according to the technical specifications up to the designed quota, executing the track according to the design.
6. Ensuring the continuity of the track circuits, the electrical insulation of rails and the electrical protection.
7. Restoring the voltage on contact line and reopening the railway traffic with speed levels corresponding to the executed works and to the norms in force.

STAGE VIII – DEMOUNTING THE TEMPORARY BRIDGE FROM TRACK II:
Track I – traffic with speed limits of 50km/h
Track II – closed traffic
1. Cutting-off the voltage on track II and ensuring the electric protection.
2. Dismantling and removing the track on the area of the temporary bridge.
3. Removing the temporary bridge type G15 and its temporary foundations from the track.
4. Removing the LARSEN IV sheet-piles.
5. Supplementing the filling according to the technical specifications up to the designed quota, executing the track according to the design.
6. Ensuring the continuity of the track circuits, the electrical insulation of rails and the electrical protection.
7. Restoring the voltage on contact line and reopening the railway traffic with speed levels corresponding to the executed works and to the norms in force.

STAGE IX – OTHER TYPES OF WORKS:
During normal speed traffic on both lines:
1. Mounting the metallic guard rails.
2. Executing the pitching in the culvert and between the wings.
3. Executing the riprap mattresses at the ends of the culvert.
4. Calibrating the upstream and downstream culvert riverbed according to the design.
5. Removing the site organization and the work platform.

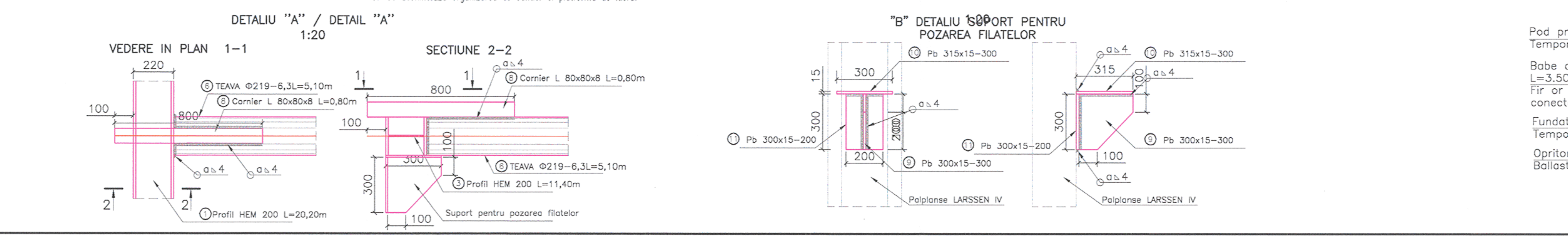

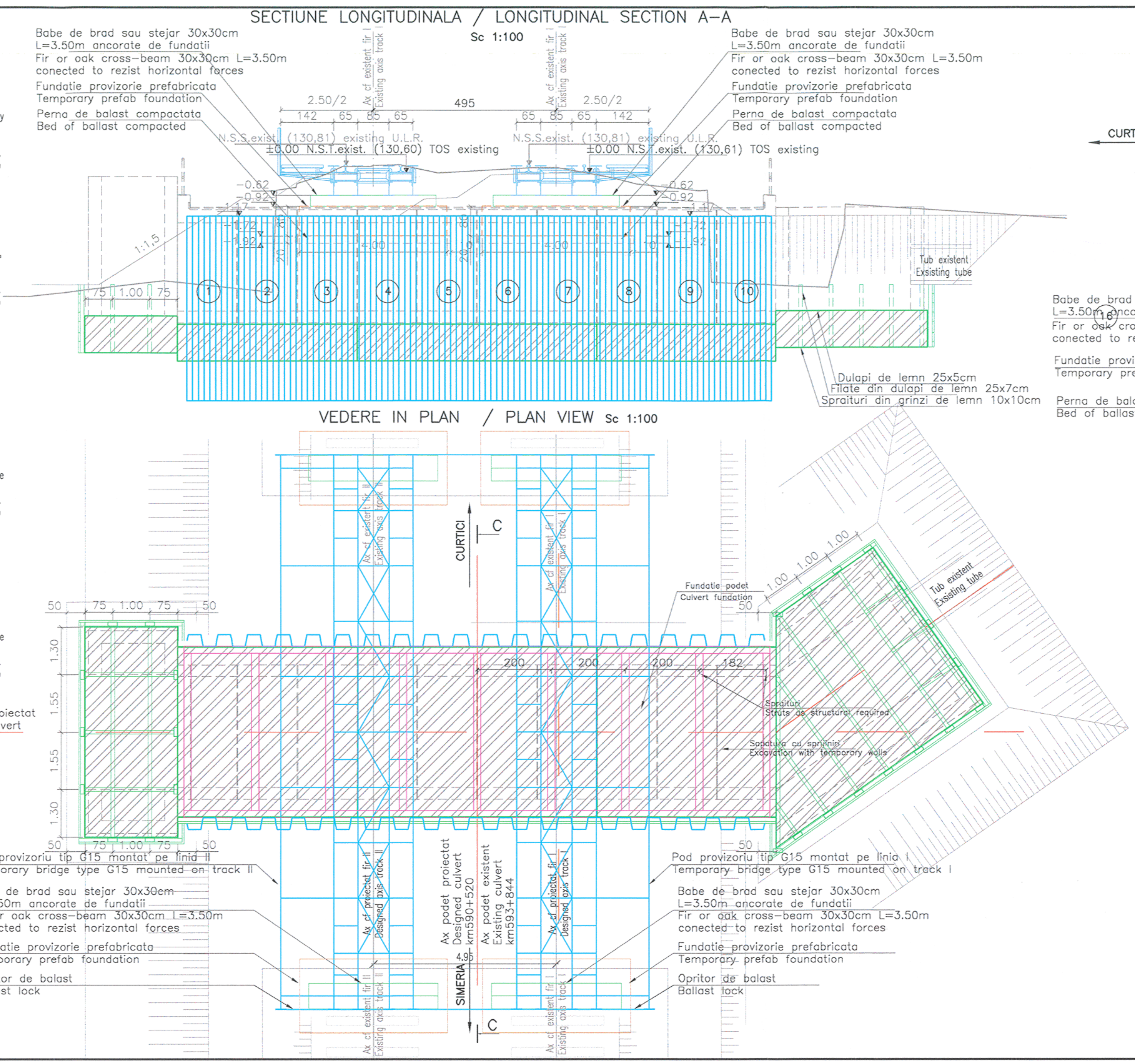

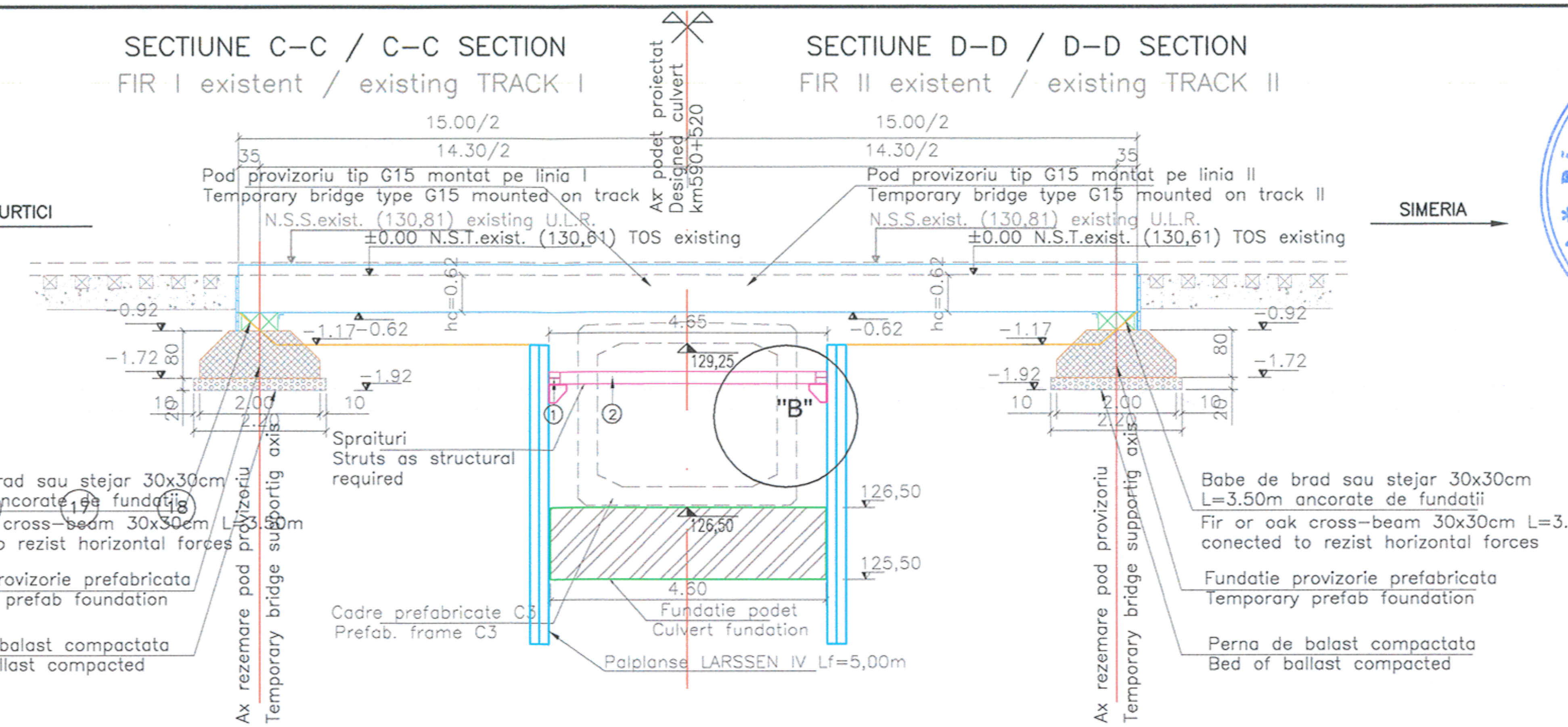

CONVOI 0.9T8.5 Vmax = 30km/h

1. Constructia se incadreaza in categoria B de importanta: Constructii de importanta deosebita, modelul 1 de asigurare a calitatii conform HG 766/1997.
2. Proiectul va fi verificat la exigentele A4, B2, D2.

NOTA:
1. Prezentul plan s-a intocmit in baza urmatoarelor date:
– proiectul tehnic, date culese pe teren, fisa podetului;
– studii topo, studii geo.
2. Inceperea executiei se va face numai dupa trasarea pe teren a axelor liniilor si verificarea de catre executant daca nu au intervenit modificari fata de datele de proiectare;
3. La constructie se vor respecta cu strictete prevederile din "Codul de practica pentru executarea lucrarilor din beton, beton armat si beton precomprimat", indicativ NE 012–99 si din NE 013–2002, din "Normativul pentru verificarea calitatii si receptia lucrarilor de constructii aferente", C56–85;

Tehnologia de pozare a prefabricatelor:
–pe betonul de fundatie intarit se astern 2cm de mortar de ciment pentru nivelare si 1cm pentru pozare;
–prefabricatele se aseaza in amplasament, dupa care se ridica si se observa urma lasata pe stratul de mortar proaspat. In cazul in care nu s-a realizat asezarea pe toata suprafata, se completeaza cu mortar de ciment de poza.
Operatia se repeta pana cand se obtine rezemarea pe toata suprafata.

EXTRAS DE PROFILE METALICE HEM 200 PENTRU SPRIJINIRI

Marca/ Mark	DENUMIREA PIESEI	SECTIUNE	Lungime bare/ Bars lenght [m]	Numar bare/ Bars number [buc./ pcs.]	Lungimi totale/Length [m]
1	SPRAIT	HEM 200	4.25	9	38.25
2	FILATA	HEM 200	15.90	2	31.80
Lungimi pe tip profil/ Lenghts per type profile [m]					70.05
Masa pe metru/ Weight per meter [kg/m]					103
Masa pe tip de profil/ Weight per type profile [kg]					7215.15
TOTAL [kg]					7220

CONVOY 0.9T8.5 Vmax = 30km/h

1. This structure belongs to category B of importance: Special structure model 1 of quality, complying with GD 766/1997.
2. The project will be verified at A4, B2, D2 requirements.

NOTE:
1. This plan has been drawn up on the basis of the following data:
– tehnical project, acquisition of data to area, culvert leaflet;
– topo studies, geo studies.
2. The works to the culvert will start only after tracing the track axis on the field and after the constructor will verify if there have not appeared any modifications considering the designing data.
3. There will be strictly respected the provisions from "Practice code for concrete, reinforced concrete and prestressed concrete works execution" ind. NE 012–99 and from NE 013–2000; from "Normative for quality checking and works reception for afferent construction", C56–85.

Prefabricated elements laying tehnology:
–2cm cement mortar for levelling and 1cm for laying are placed on the hardened foundation concrete;
–the prefabricated elements are placed on site, after than there are rising and the track leaved on the fresh mortar layer is observed. If the laying is not done on the whole surface, cement mortar is cast on.
The operation is repeated till the whole supporting surface is obtained.

EXTRAS DE MATERIAL METALIC PENTRU SUPORTI FILATE

Marca/ Mark	DENUMIRE A PIESEI	SECTIUNE [mm]	Lungime bare/ Bars lenght [mm]	Numar bare/ Bars number [buc./ pcs.]	Lungimi totale/Length [m]
9	Pb	300x15	300.00	18	5.40
10	Pb	300x15	315.00	18	5.67
11	Pb	300x15	200.00	18	3.60
Lungimi pe tip profil/ Lenghts per type profile [m]					14.67
Masa pe metru/ Weight per meter [kg/m]					33.75
Masa pe tip de profil/ Weight per type profile [kg]					495.11
TOTAL [kg]					500

RĂCĂNEL I. IONUȚ RADU – ROMÂNIA M.L.P.A.T. – Nr. 07230 – A4, B2, D – INGINER VERIFICATOR PROIECTE

Prezentul plan anuleaza si inlocuieste versiunea anterioara
This plan cancels and replaces previous version

Verificator / Expert Checker / Expert	Cerinta Requirement	Semnatura Signature	Referat / Expertiza Report / Expertise

CHIRICĂ ANTON – ROMÂNIA M.L.P.A.T. – INGINER VERIFICATOR PROIECTE – Nr. 1583

European Investment Bank

MINISTERUL TRANSPORTURILOR

BENEFICIAR / BENEFICIARY :

COMPANIA NAȚIONALĂ DE CĂI FERATE "CFR" SA

PROIECTANT / DESIGNER: PÖYRY			Data Date	Semnatura Signature
Aprobat Approved	Sef de echipa Team leader	C. Teodorescu	01.2013	
Verificat Checked	Expert Cheie Key Expert	R. Tudorascu	01.2013	
Subcontractant / Subcontractor		VIOTOP		
Aprobat Approved	Adjunct Sef de echipa Deputy Team leader	A.M. Baicu	01.2013	
Proiectat Designed	Inginer Engineer	V. Aldescu	01.2013	

"Reabilitarea liniei c.f. Frontieră - Curtici - Simeria, parte componentă a coridorului IV Pan - European pentru circulaţia trenurilor cu viteză maximă de 160 km/h"
Tronsonul 2-A : km 614 - cap Y Bârzava
"Rehabilitation of the Railway Line Border - Curtici - Simeria, component Part of the IV Pan - European Corridor for the Trains Circulation with maximum speed of 160 km/h"
Section 2-A : km 614 - end Y Bârzava

Project 9i 35311.1

Faza / Phase: PTH+CS / TD+TS

Denumire desen / Drawing name:

TEHNOLOGIE DE EXECUTIE / EXECUTION TECHNOLOGY
PODET / CULVERT KM pr. 590+520 (KM ex. 593+844)

Scara / Scale	Revizia / Revision	Cod desen / Drawing Code	Nr / No
1:100	1 / 04.2013	PT.02.02.06.PO.02.04	04